UTC
BENELLIGRU S.R.L

15000/3 SL

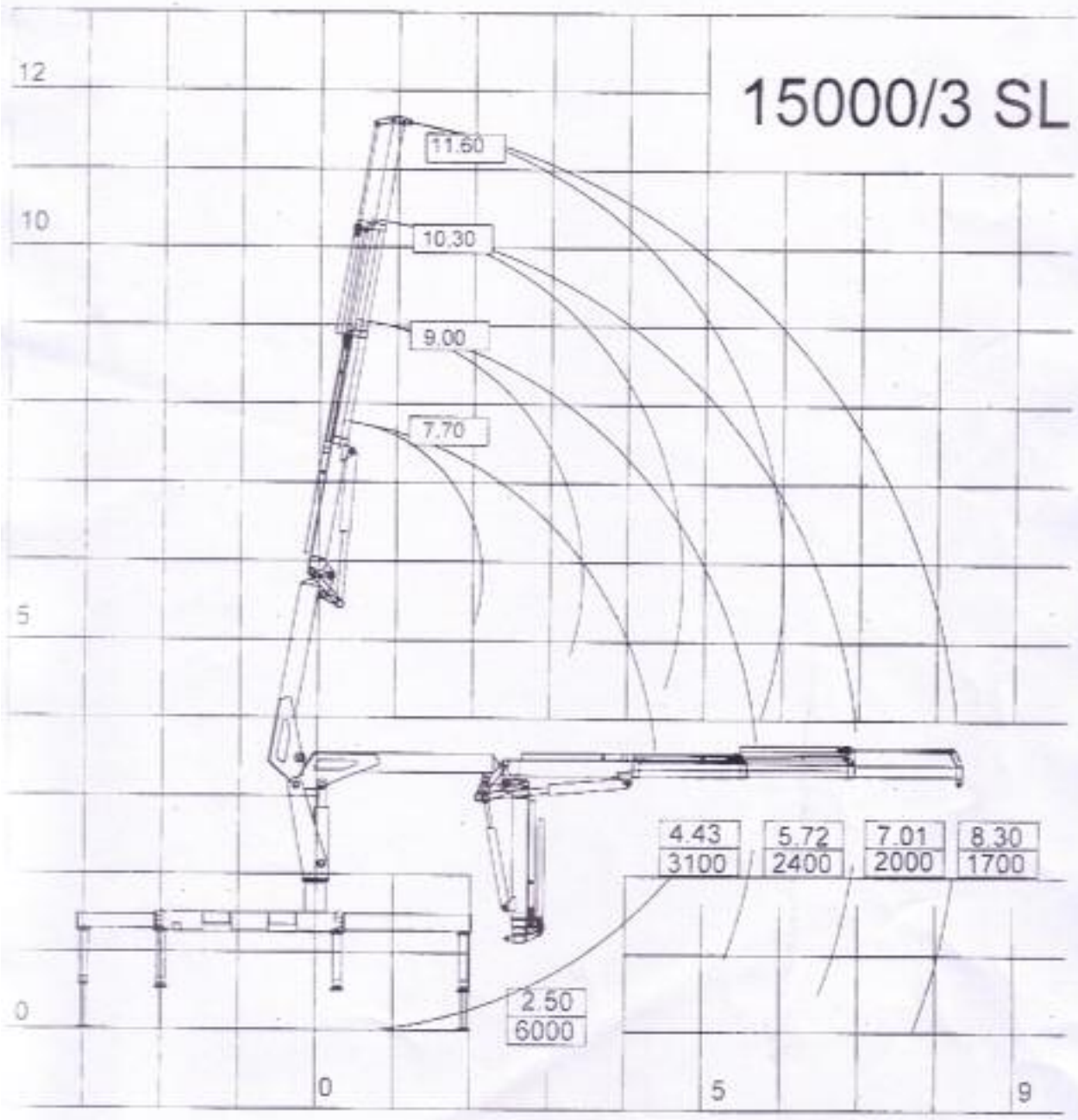

TOTALE P.02